solstice®

Heat Pumps

COMFORT

WHEN YOU

NEED IT

SPACE PAK® HYDRONICS

solstice®

COMFORT WHEN YOU NEED IT

SpacePak's Solstice® heat pumps are air-to-water reverse cycle heat pumps that use the comfort of Hydronics as the primary source for both heating and cooling demands. In any season, SpacePak units provide perfectly conditioned air with reliability and efficiency.

Solstice heat pumps work similar to conventional heat pumps by circulating refrigerant, which vaporizes at a low temperature in its enclosed evaporator, producing additional energy in the process. Further concentration of the conditioned warm vapor occurs in SpacePak's dual programmable compressor raising it to a temperature where it can be circulated through one of the many SpacePak hydronic air handlers for distribution to the occupied space.

Flexible Solutions

Heat pumps can be used in many types of applications from small homes with multiple thermostat driven zones, to large homes and light commercial applications.

Perfect for zoning, these units can operate in a loop that can provide conditioned air to several individual zones utilizing single or multiple air handlers, allowing total comfort control to the occupied space.

Whether radiant heating & cooling, domestic hot water, dehumidification, process cooling, or even conventional with multiple air handlers SpacePak Solstice heat pumps offer application flexibility requiring less equipment outside.

Units can be easily installed at ground level, on rooftops or even in remote locations when necessary.

High Efficiency

Solstice heat pumps utilize a condenser coil that is 30% larger than standard units and operate with a COP of up to 4. Designed for heating in colder climates, SpacePak Solstice produce up to 67,000 BTU/h, and can effectively heat in ambient temperatures as low as 0°F.

Perfect Match

SpacePak's Solstice allows custom control not obtainable by most traditional refrigerant-based systems. Heat pumps use hydronics (water) to provide unparalleled load matching by utilizing adjustable water flow, water temperature, and airflow settings.

Intertek

SPACE PAK HYDRONICS

Green by Nature

An ultra safe and environmentally friendly design keeps all refrigerant sealed in its powder coated galvanized steel cabinet and outside the occupied space. Heat pump high efficiency compressors operate on R-410A but use only a fraction of the refrigerant needed by other systems, while providing superior performance and high COP and EER.

Solstice heat pumps run quieter than traditional systems with their dual fan, horizontal discharge configuration and soft start activation.

System Layout

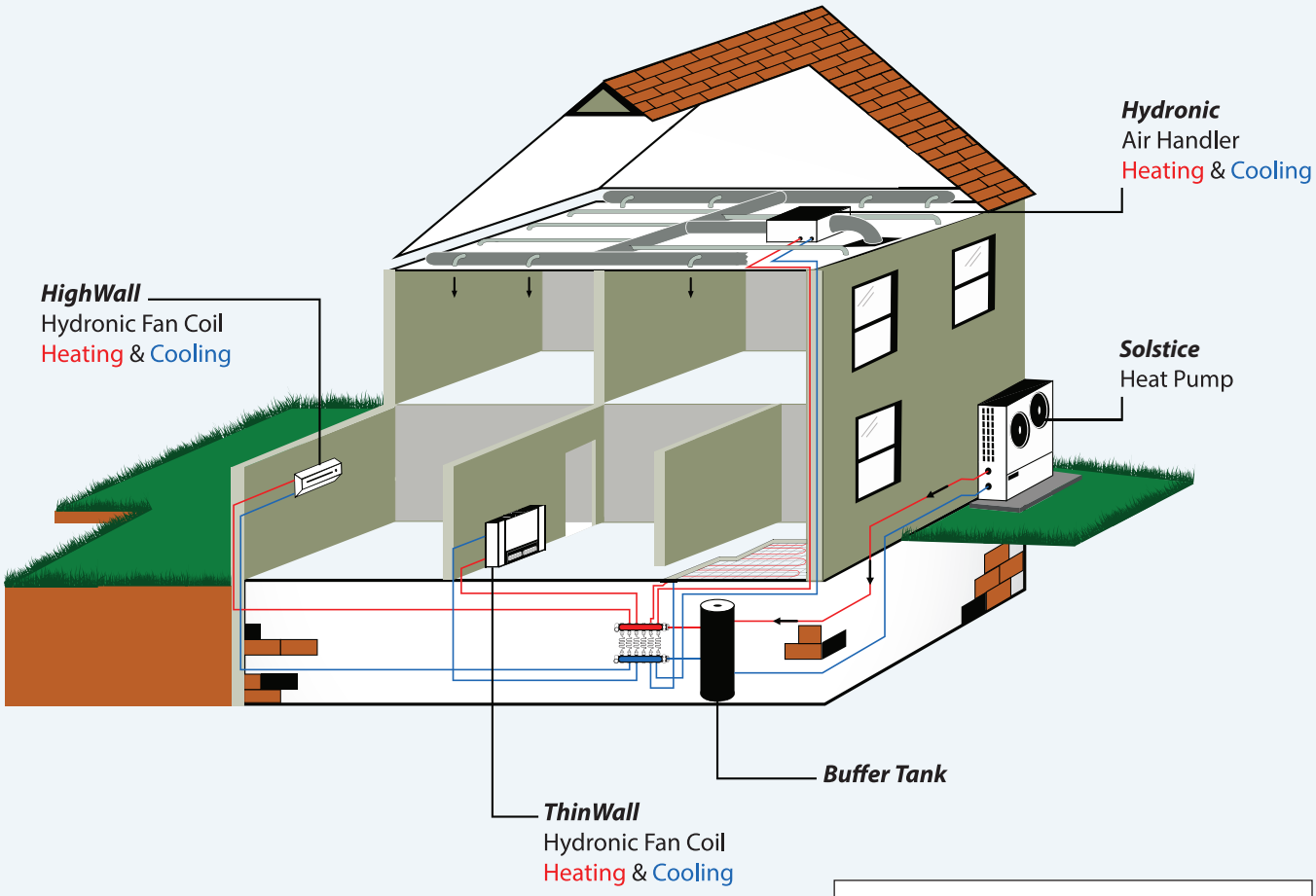

Key:

= Supply

= Return

Illustration depicts heating application. In cooling applications chilled water replaces hot water supply lines.

solstice® EXTREME

Solstice Extreme, SpacePak's low ambient heat pump provides primary heating and cooling even in severe weather climates. Its environmentally friendly design uses EVI technology and the clean efficient characteristics of hydronics as its primary energy source to deliver perfectly conditioned air to any occupied space.

Standard Features

- Enhanced Vapor Injection
- 66,480 BTU/h at 47°F Ambient
- 3.3 Ton of Cooling at 95°F Ambient
- Simple Piping & Pumping
- Installation & Service Friendly
- Easily Zoned
- Proven Integrated Control
- Outdoor Reset
- Green Hydronic Energy – No Refrigerant in Occupied Space
- Low Ambient Freeze Protection

Enhanced Vapor Injection (EVI)

The award winning EVI technology and high efficiency condenser used in SpacePak low ambient heat pumps, provides improved efficiency, reliability and heating capacities. EVI increases heating capacity by over 30%, making it the perfect compressor for severe ambient conditions (0°F) in cold climates, while maintaining the ability to cool during the summer months.

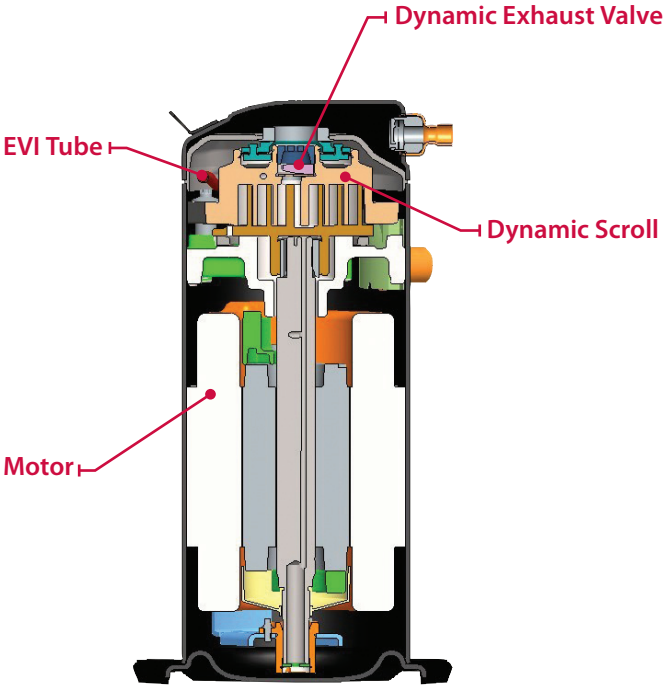

solstice® EXTREME

Specifications

Model	LAHP - 048	COP
Heating Capacity (47°F/8°C Ambient temp. 120°F/50°C Supply Water)	66,480 BTU/h (18.9kW)	3.26
Heating Capacity (17°F/-8°C Ambient temp. 120°F/50°C Supply Water)	46,440 BTU/h (13.6kW)	2.35
Heating Capacity (5°F/-15°C Ambient temp. 120°F/50°C Supply Water)	42,240 BTU/h (12.4kW)	2.12
Cooling Capacity (95°F/35°C Ambient temp. 44°F/6.7°C Supply Water)	40,000 BTU/h (11.7kW)	2.43
Volts	230V/1ph/60Hz	
Minimum water supply temperature	42°F (5.5°C)	
Maximum water supply temperature	131°F (55°C)	
Minimum operating ambient temperature	-8°F (-22°C)	
Maximum operating ambient temperature	105°F (40°C)	
Minimum water flow	10 GPM (37.9 l/min)	
Rated water flow	11 GPM (41.6 l/min)	
Pressure drop at recommended flow	17.1 ft/7.4 PSI (35.8 kPa)	
Heating current	31A	
Cooling Current	23.5A	
Noise level at max fan speed (Heating or Cooling)	62 dB (A)	
Compressor	EVI Scroll	
Installed weight	386 lbs (175 kg)	

Dimensions

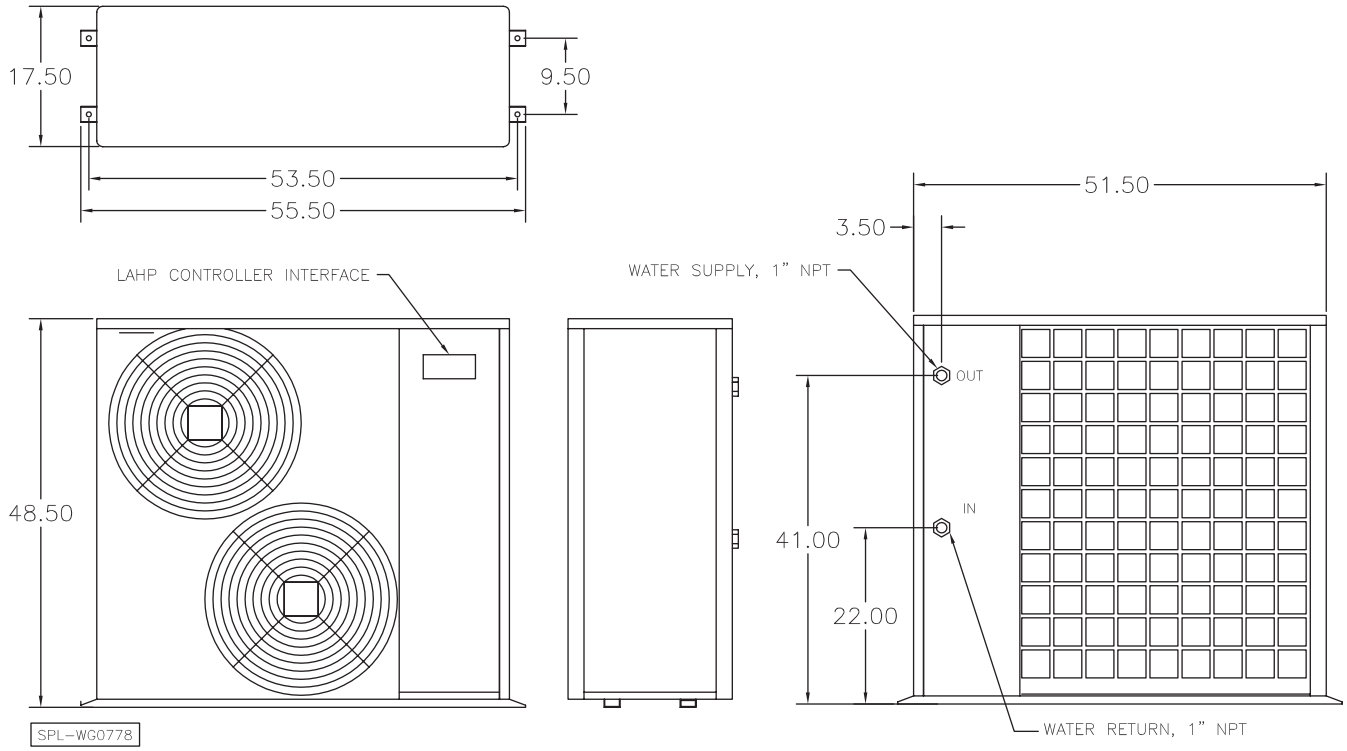

solstice® EXTREME

Performance

LAHP Heating Operation

Supply Water Temp °F	Ambient Temp °F	Capacity BTU/hr	Water DP ft WC	Watts	COP
110	-5	37,500	14.6	3,880	2.30
	17	44,800	14.6	3,970	2.70
	47	60,580	14.6	4,263	3.75
120	-5	38,500	14.6	4,513	2.00
	17	46,440	14.6	5,790	2.35
	47	66,480	14.6	5,963	3.26
130	-5	40,425	14.6	5,249	1.86
	17	48,762	14.6	5,371	2.18
	47	69,804	14.6	5,768	3.04

All data based upon pure water @ 11.0 GPM

LAHP Cooling Operation

Supply Water Temp °F	Ambient Temp °F	Capacity BTU/hr	Water DP ft WC	Watts	COP
42	70	41,100	15.0	4,298	2.80
	82	39,950	15.0	4,414	2.65
	95	38,800	15.0	4,897	2.32
44	70	42,500	15.0	4,190	2.97
	82	41,250	15.0	4,238	2.85
	95	40,000	15.0	4,820	2.43
47	70	44,600	15.0	4,240	3.08
	82	43,200	15.0	4,274	2.96
	95	41,800	15.0	4,708	2.60

LAHP Heating Performance

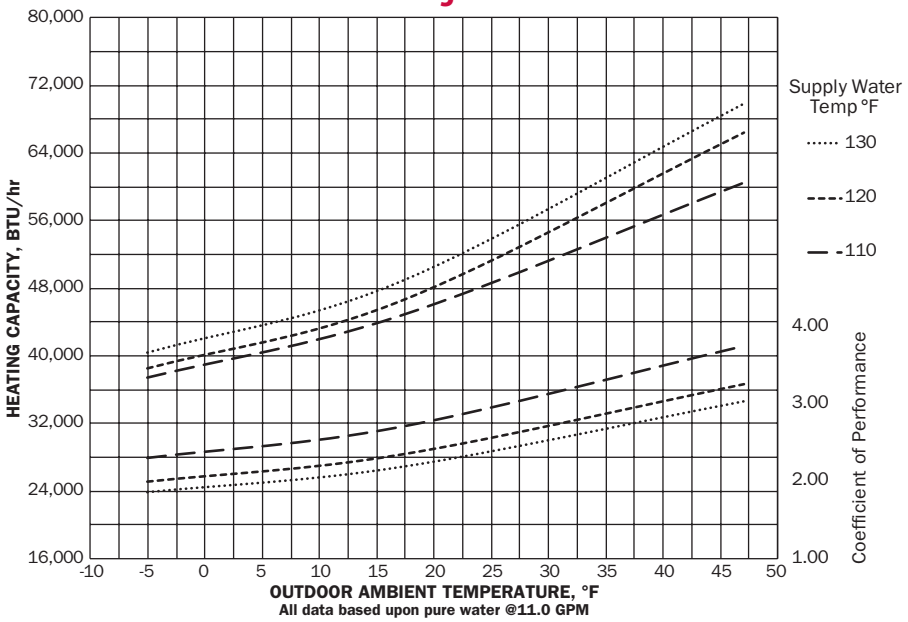

LAHP Cooling Performance

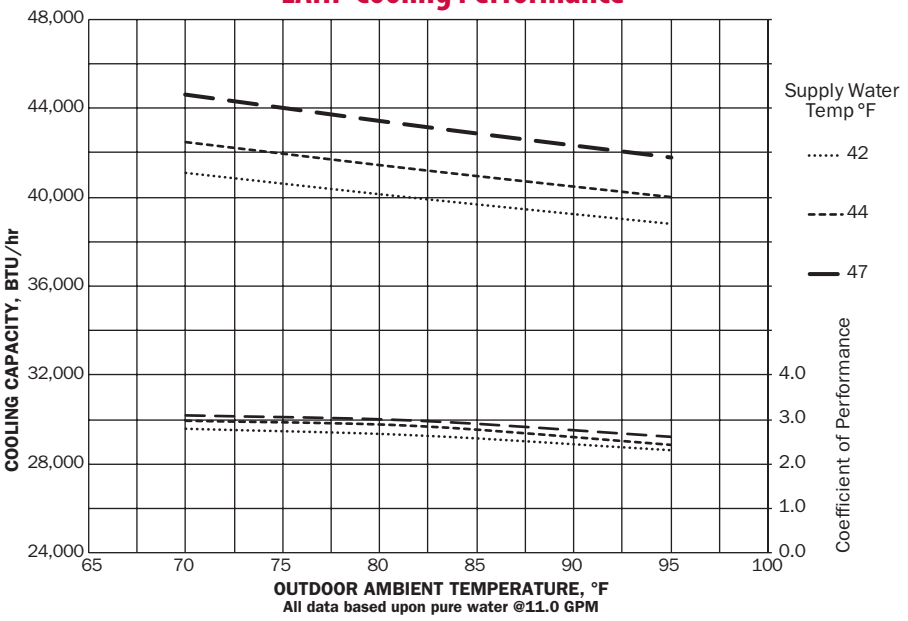

solstice® SE

Standard Features

- Dual Refrigerant Circuits
- Simple Piping & Pumping
- Installation & Service Friendly
- Easily Zoned
- Self Diagnostic Control – Configurable
- Low Amp Requirements
- Quiet Operation
- Green Hydronic Energy - No Refrigerant in Occupied Space
- Low Ambient Freeze Protection

Sophisticated…. but Simple Control Platform

Intelligent factory configured control platform, with state-of-the-art self diagnostic microprocessor allow staging of compressors for seamless operation. Amp draw starts low and stays low with no spike at start-up and use a smaller breaker than other heat pump units for even more efficiency benefits.

solstice® SE

Specifications

Model	SCM - 036	SCM - 060
Heating Capacity	36,840 BTUh (10.8 kW)	52,200 BTUh (15.3 kW)
Heating COP	2.65	2.65
Cooling Capacity	36,000 BTUh (10.5 kW)	48,000 BTUh (14.1 kW)
Voltage	230v/1ph/60Hz	230v/1ph/60Hz
Min Supply Temp	36°F (2.2°C)	36°F (2.2°C)
Max Supply Temp	125°F (51.7°C)	125°F (51.7°C)
Min Water Flow	7 GPM (26.5 l/Min)	10 GPM (37.9 l/Min)
Rated Water Flow	10 GPM (37.8 l/Min)	12 GPM (45.4 l/Min)
dP @ Rated Flow	15.8 ft (47.7 kPa)	24.2 ft (72.4 kPa)
Heating Current	18.0 amps	25.6 amps
Cooling Current	16.7 amps	24.8 amps
Noise Level	56 dB (A)	56 dB (A)
Compressor	Rotary x 2	Rotary x 2
Installed Weight	354 lbs (161 kg)	407 lbs (185 kg)

All heating data at 47°F ambient, 120°F supply.
All cooling data at 95°F ambient, 44°F supply.

Dimensions

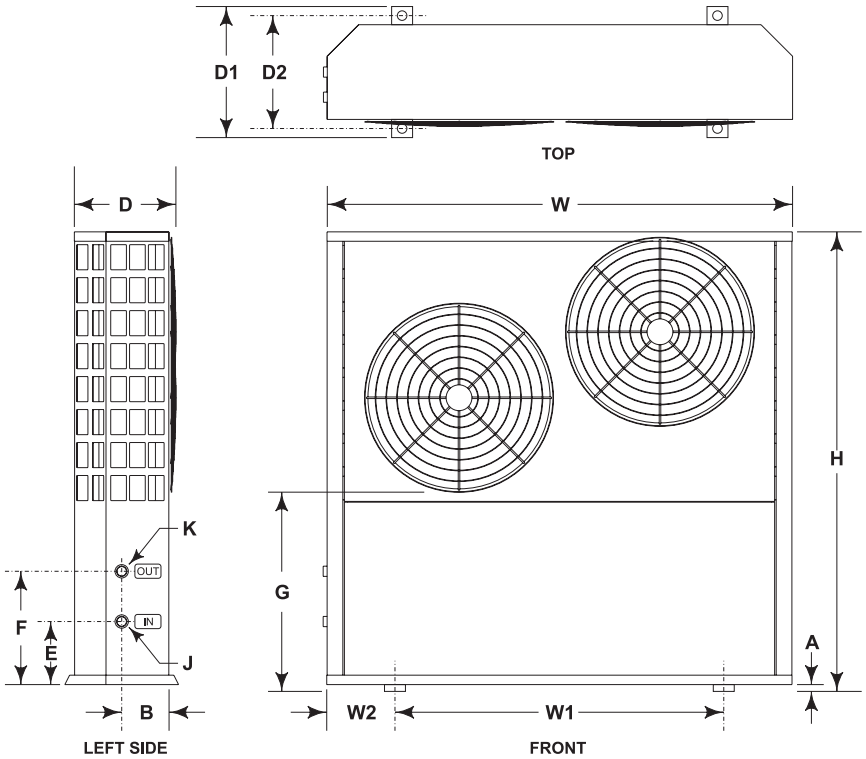

Model	A	B	D	D1	D2	E	F	G	H	J	K	W	W1	W2
	Leg height	Front to return	Cabinet depth	Mounting lug depth	Mounting lug centers	Bottom to return	Bottom to supply	Base to bottom edge of lower fan	Overall Height	Return connec-tion	Supply connec-tion	Overall width	Mounting lug centers	Lug center to edge
SCM-036	1"	10"	17 3/4"	17 3/8"	15 3/4"	5 1/2"	15 1/4"	25"	53"	1" NPT	1" NPT	43 3/8"	27 1/2"	7 15/16"
SCM-060	1"	10"	17 3/4"	17 3/8"	15 3/4"	5 1/2"	15 1/4"	25"	53"	1" NPT	1" NPT	43 3/8"	27 1/2"	7 15/16"

solstice® SE

Performance

SCM-036 Heating Operation

Supply Water Temp °F	Ambient Temp °F	Capacity BTU/hr	Water DP ft WC	Watts	COP
100	17	23,397	12.0	2,742	2.50
	32	33,075	12.0	2,801	3.46
	47	42,754	12.0	3,008	4.16
110	17	21,718	12.0	3,190	1.99
	32	30,703	12.0	3,258	2.76
	47	39,687	12.0	3,499	3.32
120	17	20,160	12.0	3,710	1.59
	32	28,500	12.0	3,790	2.20
	47	36,840	12.0	4,070	2.65

SCM-036 Cooling Operation

Supply Water Temp °F	Ambient Temp °F	Capacity BTU/hr	Water DP ft WC	Watts	COP
42	82	36,225	12.0	3,019	3.20
	95	33,872	12.0	3,528	2.40
	105	30,579	12.0	4,497	1.70
44	82	38,500	12.0	3,208	3.60
	95	36,000	12.0	3,750	2.50
	105	32,500	12.0	4,100	1.80
47	82	42,070	12.0	3,825	3.80
	95	39,338	12.0	4,522	2.80
	105	35,514	12.0	5,822	2.00

All data based upon pure water @ 10.0 GPM

SCM-036 Heating Performance

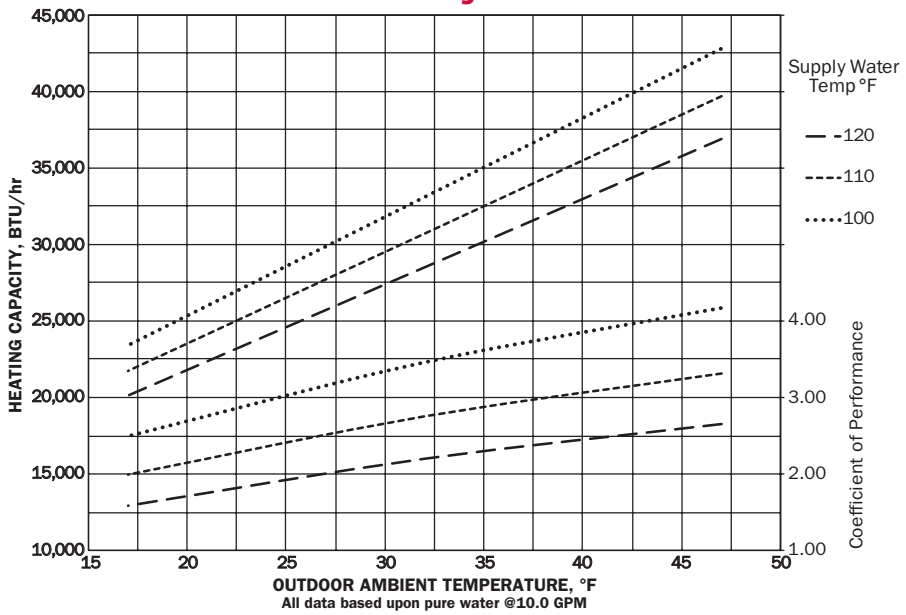

SCM-036 Cooling Performance

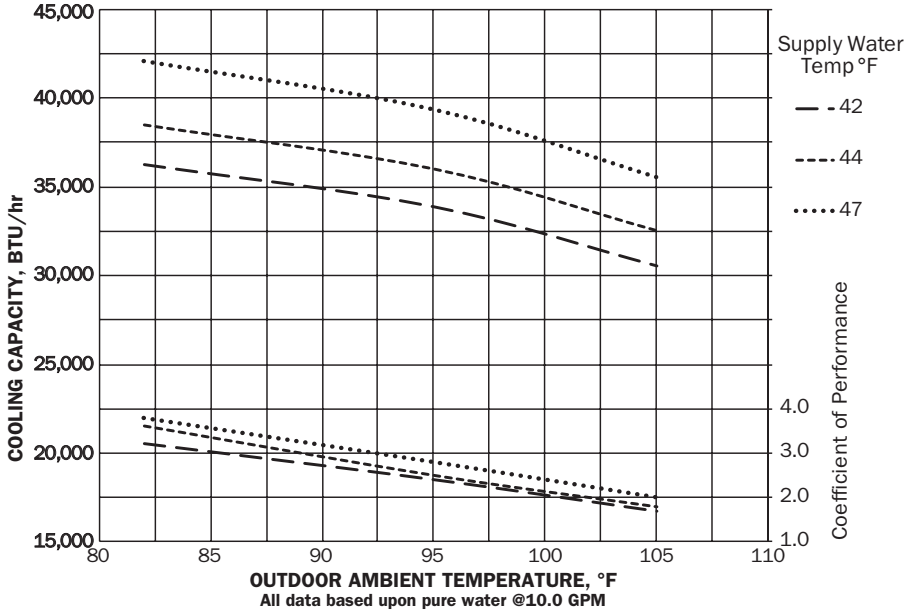

solstice® SE

Performance

SCM-060 Heating Operation

Supply Water Temp °F	Ambient Temp °F	Capacity BTU/hr	Water DP ft WC	Watts	COP
100	17	33,075	13.5	3,880	2.50
	32	46,828	13.5	3,970	3.45
	47	60,580	13.5	4,263	4.16
110	17	30,703	13.5	4,513	1.99
	32	43,468	13.5	4,618	2.76
	47	56,234	13.5	4,959	3.32
120	17	28,500	13.5	5,249	1.59
	32	40,350	13.5	5,371	2.20
	47	52,200	13.5	5,768	2.65

SCM-060 Cooling Operation

Supply Water Temp °F	Ambient Temp °F	Capacity BTU/hr	Water DP ft WC	Watts	COP
42	82	54,102	13.5	5,281	3.00
	95	45,163	13.5	5,510	2.40
	105	34,343	13.5	6,285	1.60
44	82	57,500	13.5	5,262	3.20
	95	48,000	13.5	5,622	2.50
	105	36,500	13.5	5,938	1.80
47	82	62,832	13.5	5,411	3.40
	95	52,451	13.5	5,485	2.80
	105	39,885	13.5	5,840	2.00

All data based upon pure water @ 12.0 GPM

SCM-060 Heating Performance

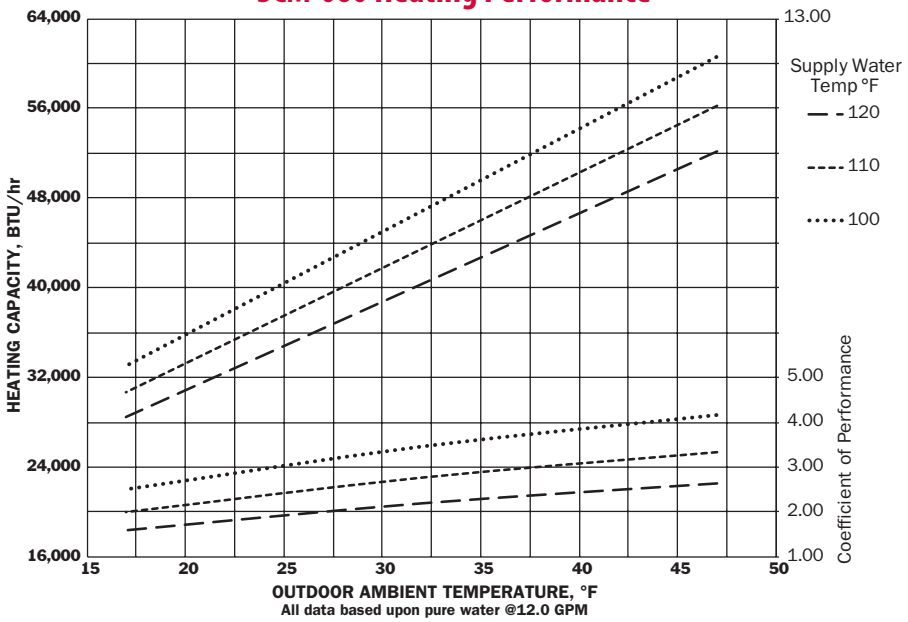

All data based upon pure water @12.0 GPM

SCM-060 Cooling Performance

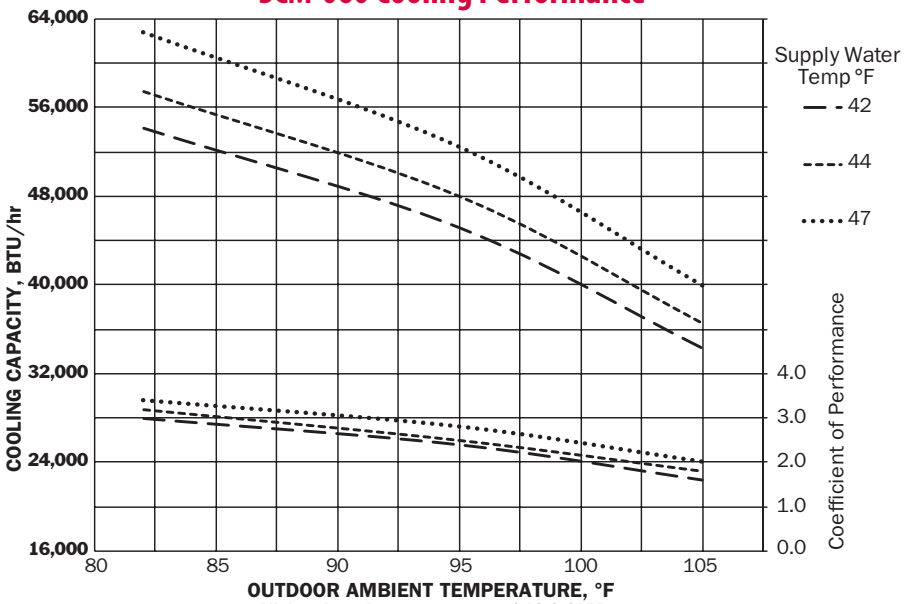

All data based upon pure water @12.0 GPM

Solstice® BT

Hydronic buffer tanks are used as both hydraulic separators and hydronic buffer tanks.

As a hydraulic separator, BT's separate the hydronic from the energy source loop (heat pump / boiler) from the hydronic flow in the distribution system (air handlers / emitters). Hydraulic separation is used primarily in systems where flow rates from the source to the distribution vary or with applications utilizing variable speed pumps. The heating or cooling source can be hydraulically decoupled from the distribution system.

BT's are used as hydronic buffer tanks in systems having several low BTU cooling or heating loads calling at different times or systems operating below the design load condition.

BT's store the additional system volume and energy currently not utilized by the system for use on additional calls for heat leading to more efficient system performance and longer equipment life.

There are four connections (1 1/2" NPT on BT26 and BT40, 2" NPT on BT80) built into the BT units. Two connections can be piped to the heat pump / boiler, and two connections can be piped to the distribution system.

All tanks are durable stainless steel construction with R12 insulation and offered in 26 and 40 gallons with (2) 3kW electric heating elements.

HighWall – Heating & Cooling

HighWall fan coils are the perfect indoor complement to our low ambient heat pumps, providing optimum heating and cooling in one classic design.

ThinWall – Heating & Cooling

ThinWall fan coils are the ultra-sleek alternative to HighWall fan coils or can be used in conjunction with a HighWall unit for optimum flexibility.

SPACE PAK HYDRONICS
A MESTEK COMPANY

260 North Elm Street
Westfield, Ma 01085
(800) 465-8558
Fax (413) 564-5815
www.spacepak.com

7555 Tranmere Drive
Mississauga, Ontario L5S 1L4 Canada
(905) 670-5888
Fax (905) 670-5782